KB3541,2,3,5,8,9BL
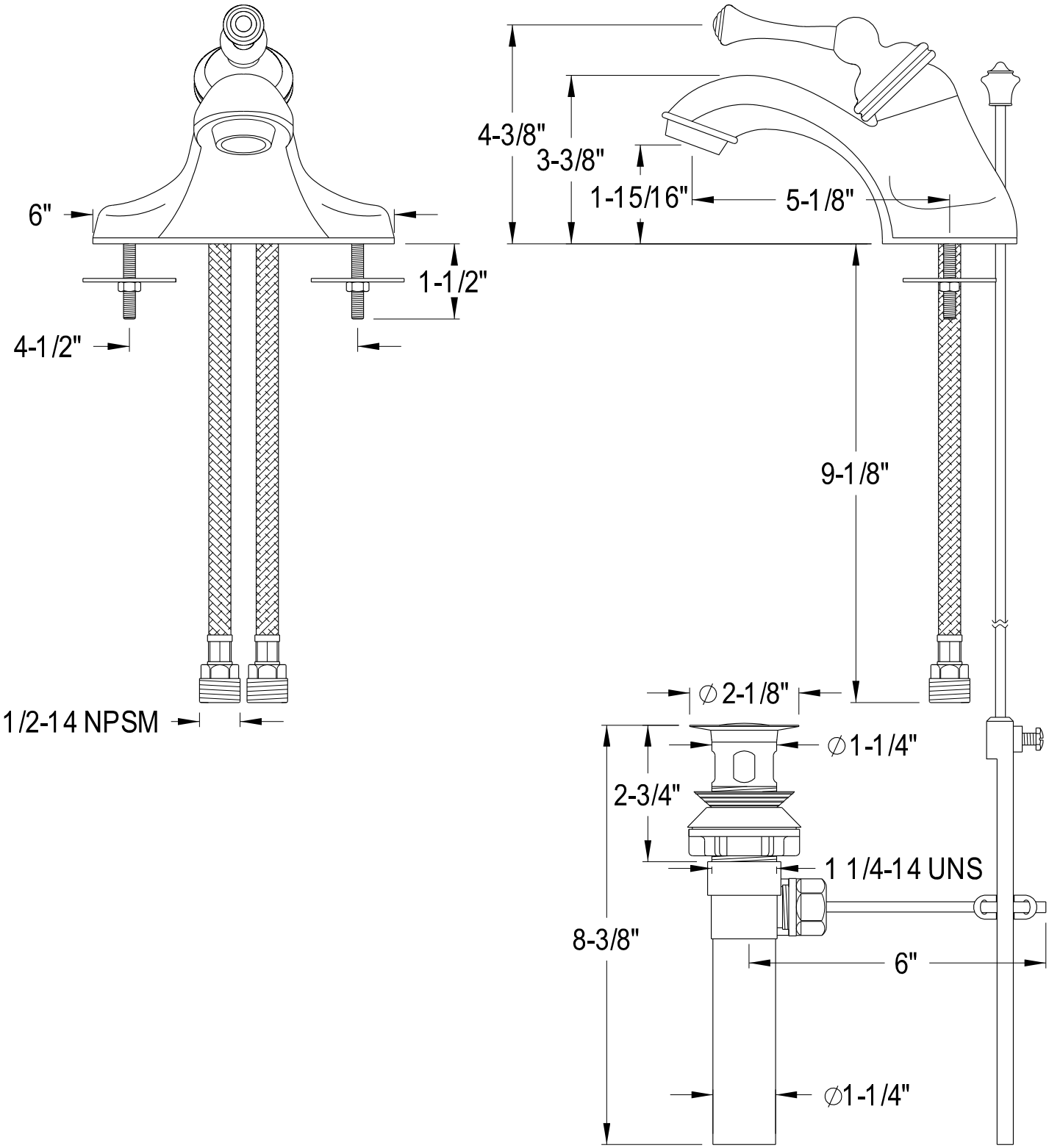
Single Handle 4" Centerset Lavatory Faucet With Retail Pop-Up