KS2330,1,2,3,7,8NX
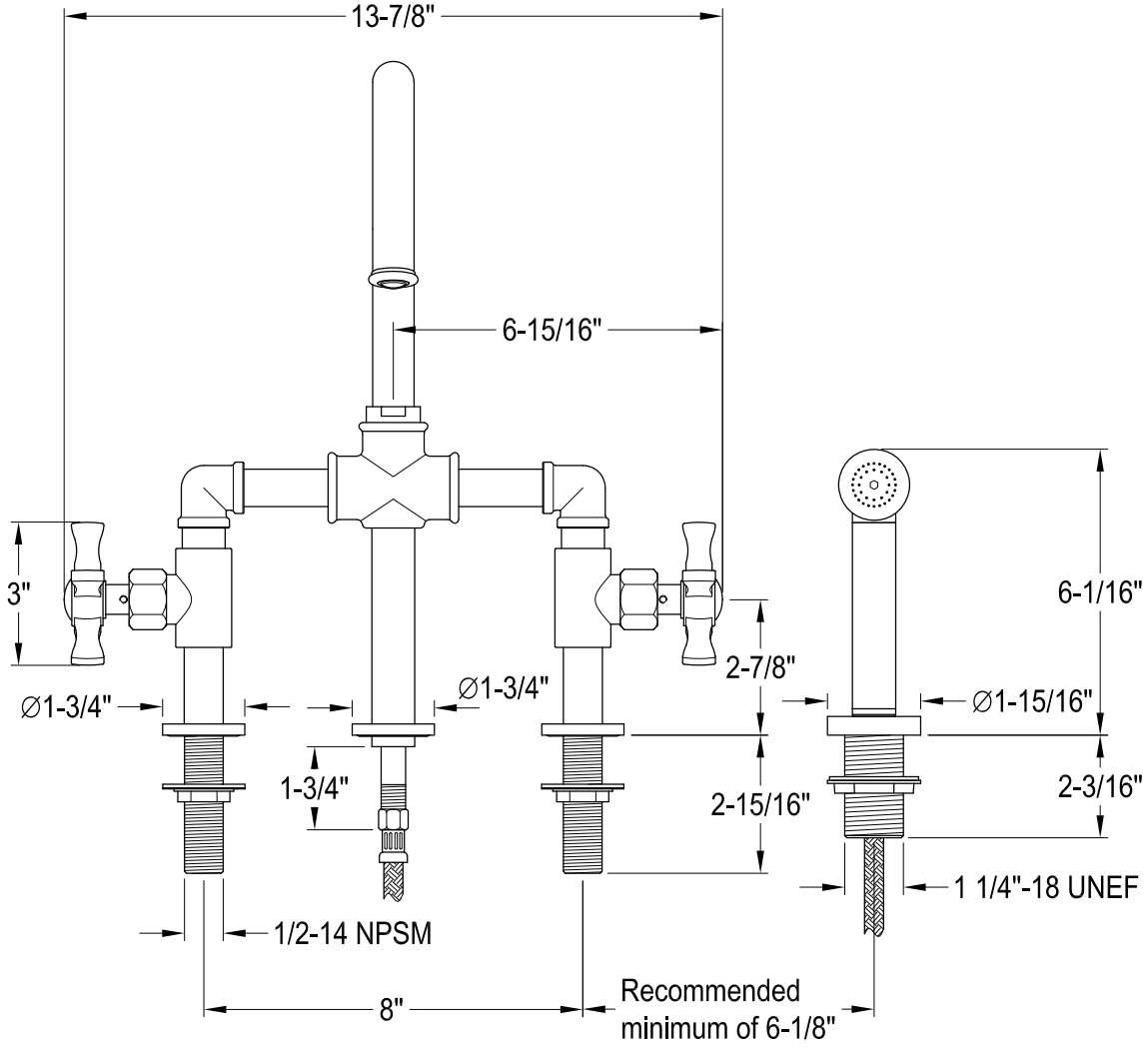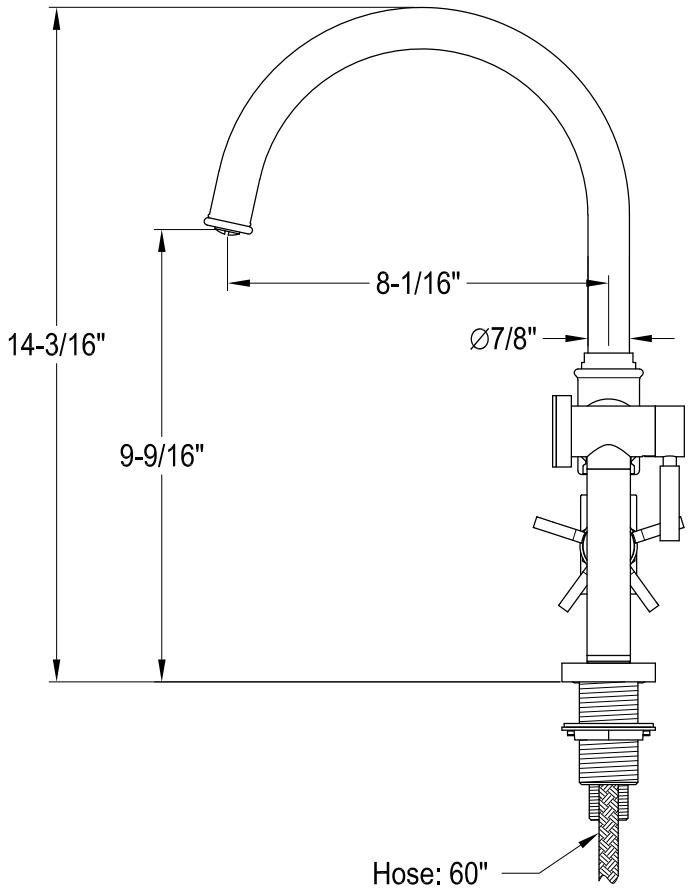
Twin Handles Bridge Kitchen Faucet With Brass Sprayer