KS2361,2,5,8FL
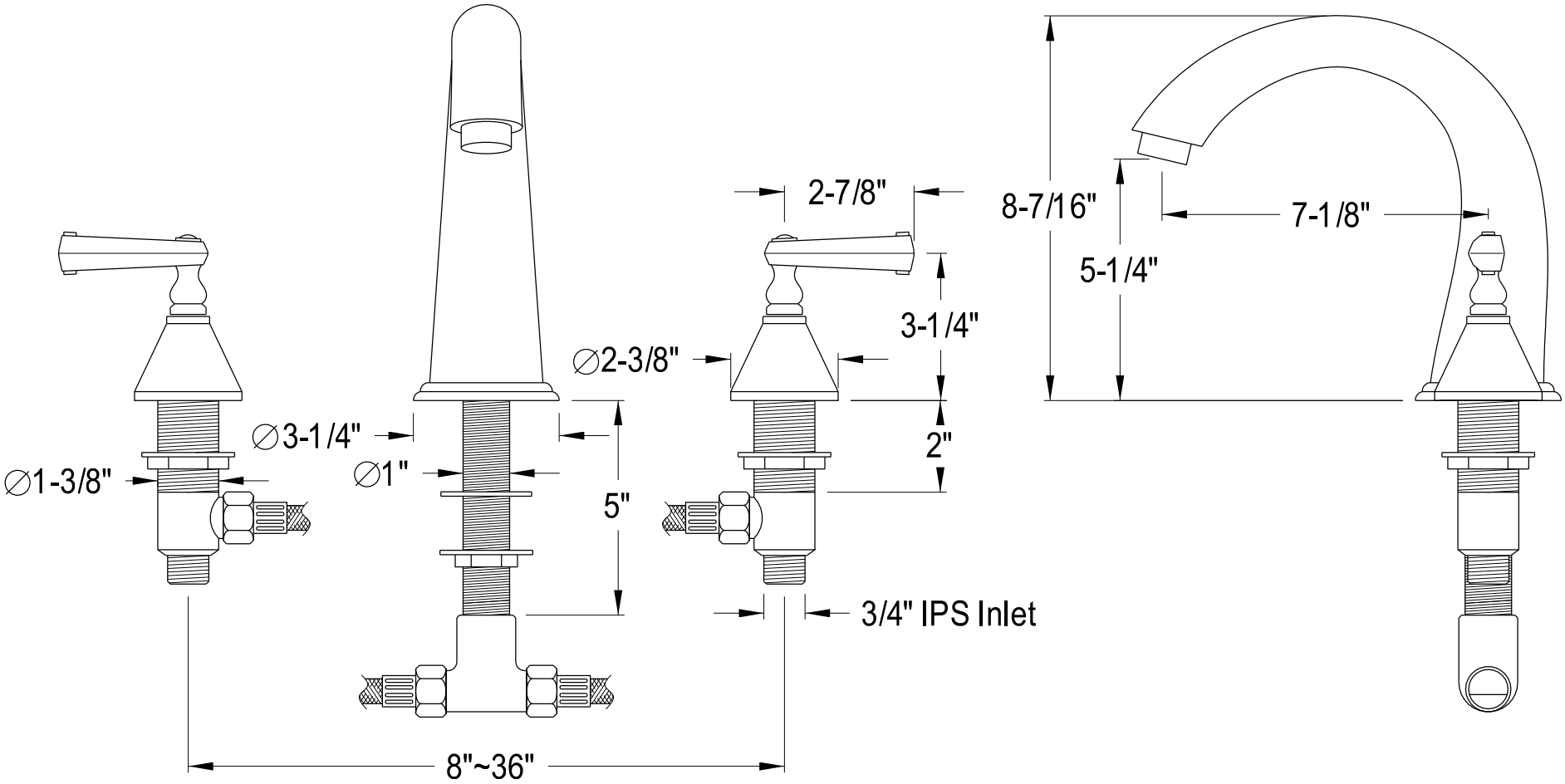
Roman Tub Filler Faucet