PSSSB2062 WIRE GRID

Cat. No.

PSSSB2062-WIRE

BARCLAY

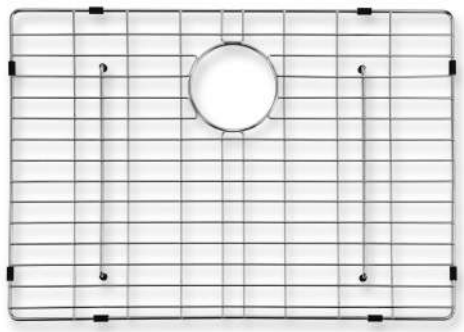

Features:

►Fits bottom of PSSSB2062 prep sink
►Rubber Feet Covers Included

Finishes:

SS Stainless Steel

W: 12-⅝”
D: 10-⅛”
H: 1”

Drain Hole :4-¾”

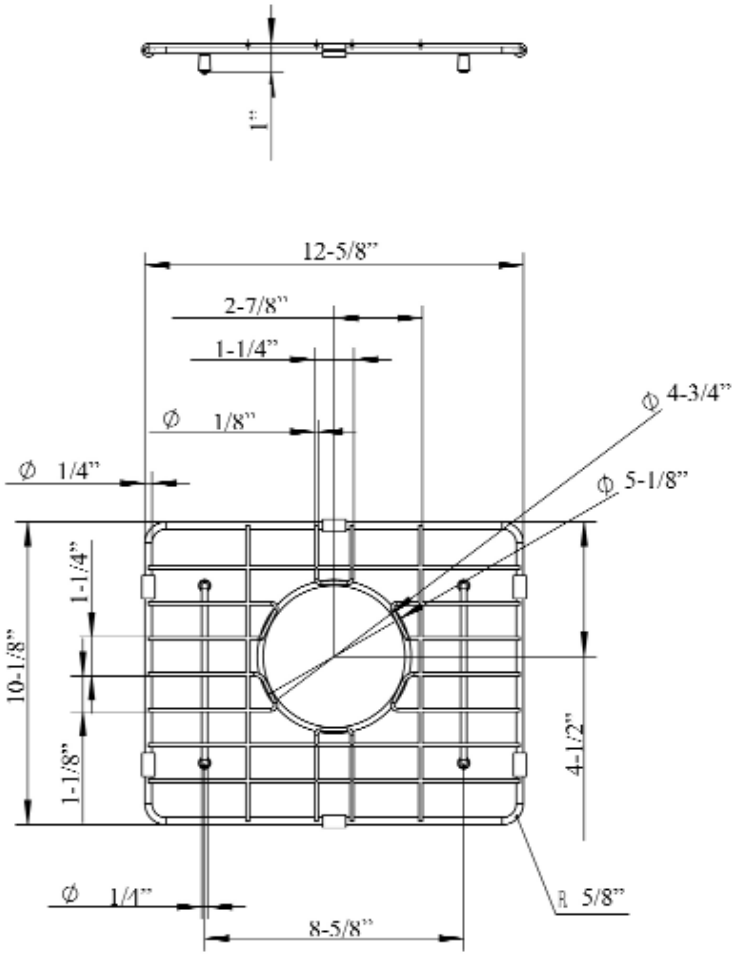

Dimensions and specifications subject to change without notice.