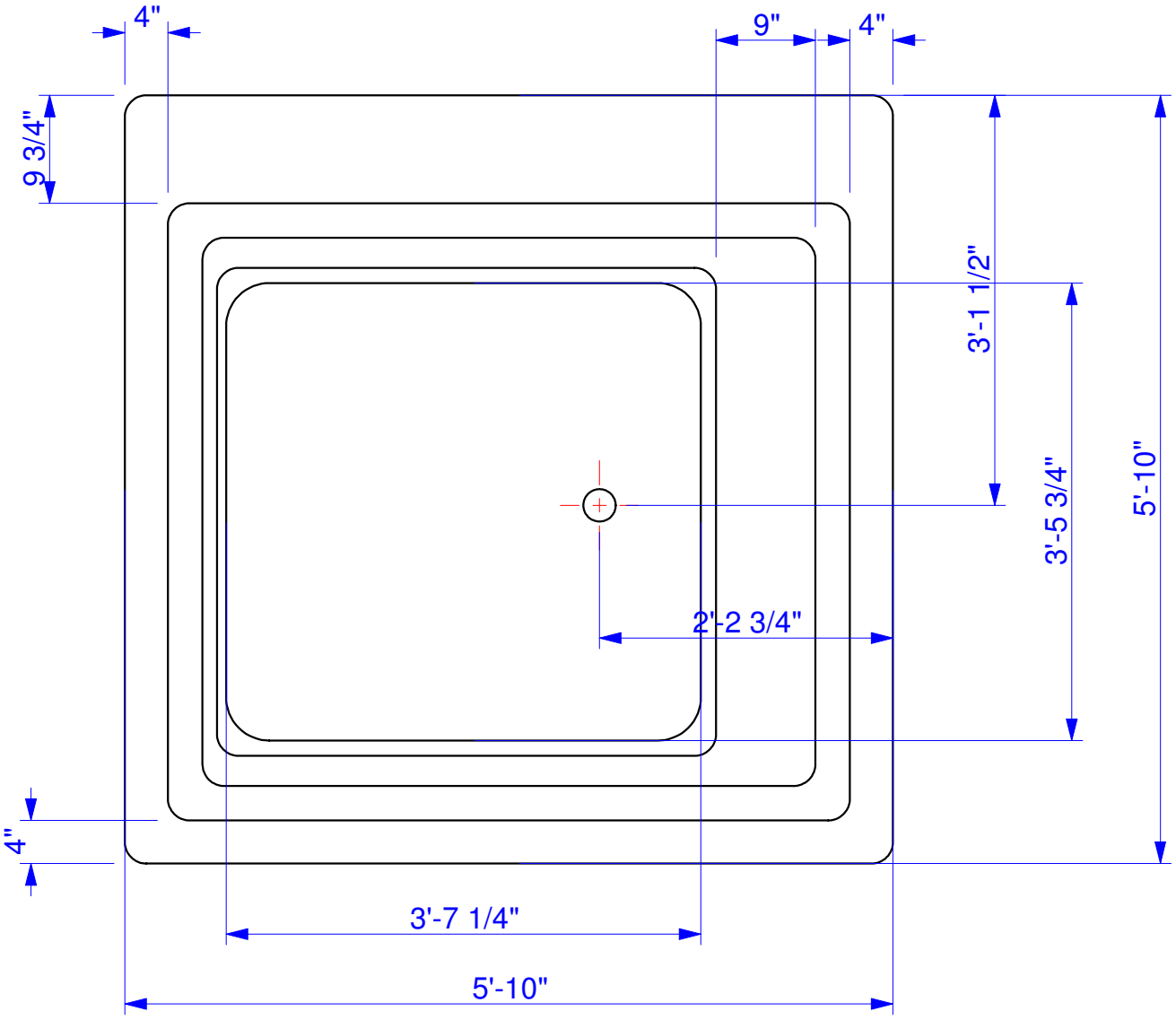

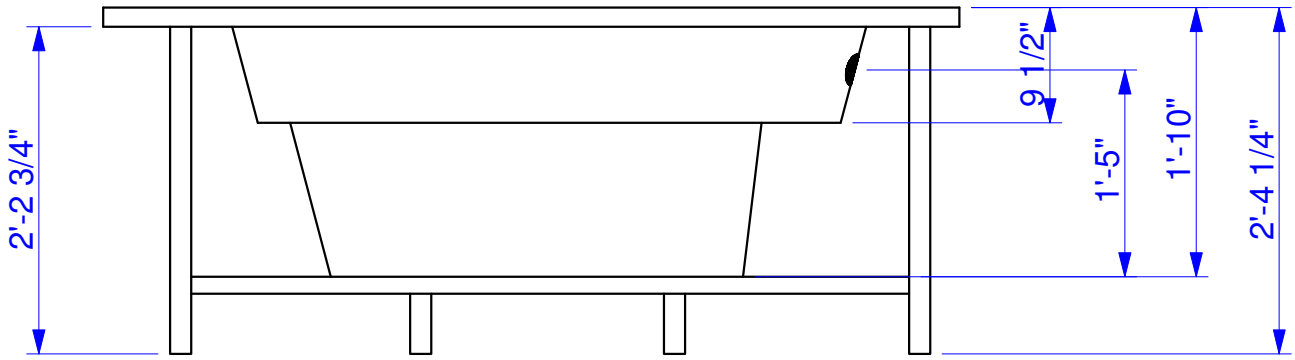

DRAWN YURIY TYMOCHKO	29.09.2012	
CHECKED		TITLE
QA		Lacus™ by Aquatica
APPROVED		
		SIZE A / DWG NO / REV
		SCALE / SHEET 1 OF 1